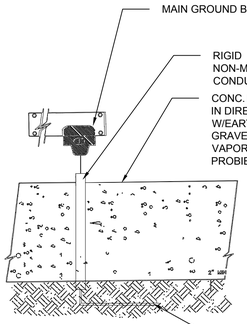

GENERAL NOTES

1. GROUND LUG OR HIGH-PRESSURE CAMP GROUND CONDUCTOR TO BUS BAR CONNECTOR.

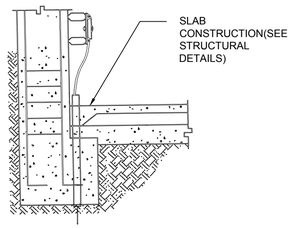

1 E-01 GROUNDING ELECTRODE
N/A

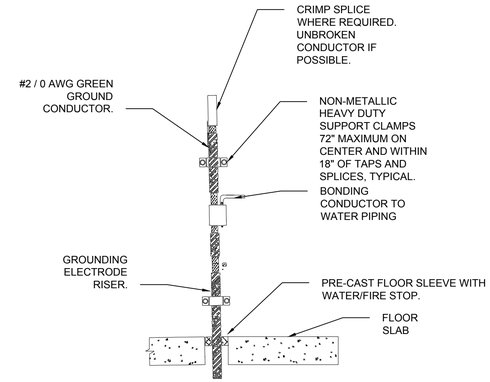

2 E-01 GROUNDING ELECTRODE RISER
N/A

TYPICAL RECOMMENDED LIGHTING LEVELS	
ROOM TYPE	LIGHTING LEVEL (LUX)
LOBBY/CORRIDOR	100
LIVING ROOM	100
BEDROOM	50
WASHROOM	100
SERVICE ROOM/ CRAWL SPACE	50
KITCHEN COOKTOP/ COUNTERTOP	300
KITCHEN GENERAL	50
STAIRWELL	10
TERRACE/BALCONY	50

3 E-01 RECOMMENDED LIGHTING LEVELS
N/A

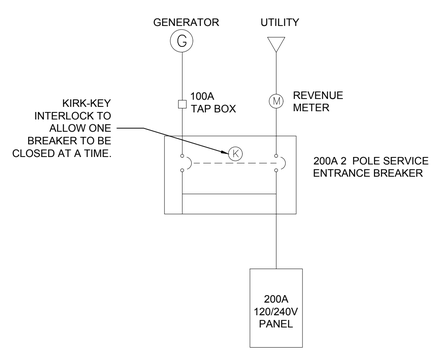

4 E-01 GENERATOR HOOK UP
N/A

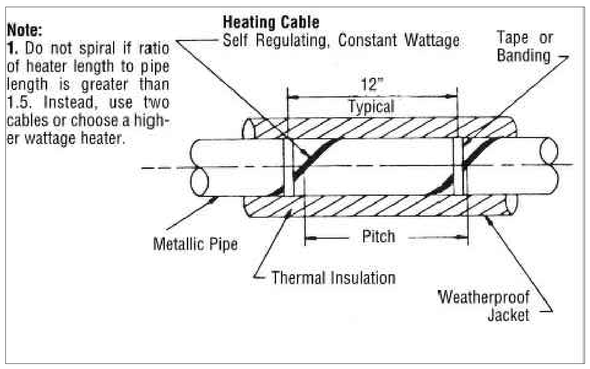

5 E-01 HEAT TRACE
N/A

NOTES

All dimensions in Metric

REV#	YYYY-MM-DD	SUBMISSION INFORMATION
1	2020-03-31	ISSUED FOR CLIENT REVIEW

DISCLAIMER:
THIS DRAWING IS PROTECTED BY COPYRIGHT LAW, AND SHOULD NOT BE REPRODUCED IN ANY MANNER, OR FOR ANY PURPOSE, EXCEPT BY WRITTEN PERMISSION OF MORRISON HERSHFIELD. CONTRACTOR SHALL VERIFY AND BE RESPONSIBLE FOR ALL DIMENSIONS AND REPORT ANY ERRORS AND/OR OMISSIONS TO MORRISON HERSHFIELD.

PROFESSIONAL SEALS

MORRISON HERSHFIELD
Suite 200, 2932 Baseline Road
Ottawa, ON K2H 1B1
Tel: 613 739 2910

PROJECT
TECHNICAL GUIDE FOR NORTHERN HOUSING

DRAWING
ELECTRICAL DETAILS

DESIGN	DATE	SCALE
JGF	2020-03-31	As Shown
DRAWN: SD	PROJECT NO: 1901150.01	
CHECKED: ACN	DRAWING NO: E-01	VERSION: 1
APPROVED		

\\mh.local\data\Proj\2019\1901150\01-Technical Guide Northern Housing P\09. CAD\05 Model\Electrical\1901150\01-Detail.dwg Last Saved: 2020-03-31 2:58 PM by - JFleming Plotted 2020-03-31 2:58 PM by Jared Fleming